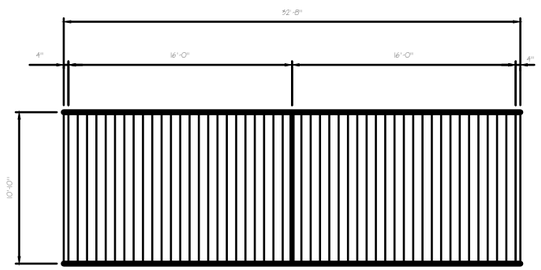

ELEVATION FOLDING PARTITION

1/4" =1'-0"

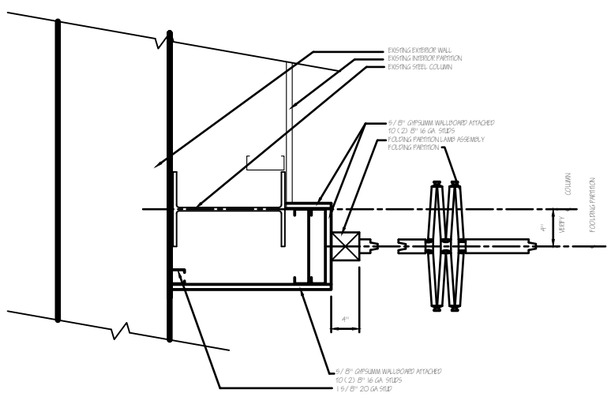

2
A5

FOLDING PARTITION JAMB

1" = 1'-0"

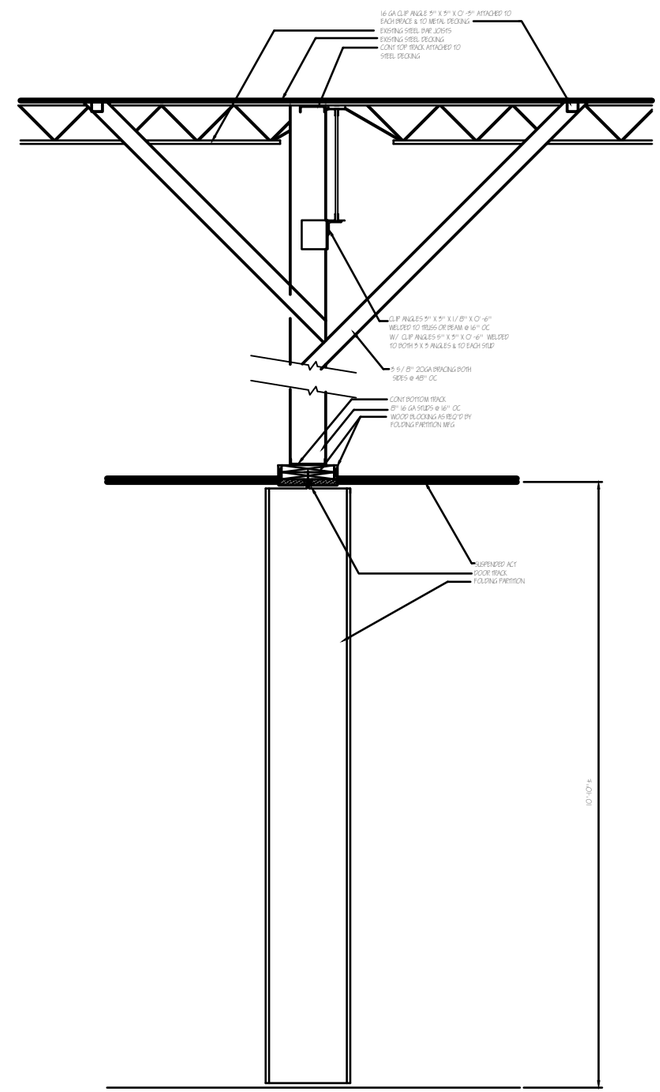

1

SECTION THRU FOLDING PARTITION

PRELIMINARY

ROBERT C. CANTER, AIA
1514 WESTCHESTER DRIVE
HIGH POINT, NORTH CAROLINA
27262
PHONE: (336) 884-4640
E-MAIL: Rcanter@northstate.net

INTERIOR ALTERATIONS FOR
HIGH PINT PUBLIC HOUSE & BREWERY
1114 EASTCHESTER DRIVE
HIGH POINT NORTH CAROLINA

ALL DRAWINGS, SPECIFICATIONS, AND OTHER DOCUMENTS PREPARED BY THE ARCHITECT FOR THIS PROJECT ARE INSTRUMENTS OF THE ARCHITECT'S SERVICE FOR USE SOLELY WITH RESPECT TO THIS PROJECT AND, UNLESS OTHERWISE PROVIDED IN WRITING BY THE ARCHITECT, THE ARCHITECT SHALL BE DEEMED THE AUTHOR OF THESE DOCUMENTS AND SHALL RETAIN ALL COMMON LAW, STATUTORY AND OTHER RIGHTS, INCLUDING COPYRIGHT. THE OWNER SHALL BE PERMITTED TO RETAIN COPIES OF THESE DOCUMENTS INCLUDING REPRODUCIBLE COPIES FOR INFORMATION AND REFERENCE IN CONNECTION WITH THE OWNER'S USE AND OCCUPANCY OF THE PROJECT. THESE DOCUMENTS SHALL NOT BE USED BY THE OWNER OR OTHERS ON PROJECTS OTHER THAN THIS ONE UNLESS AGREED TO IN WRITING BY THE ARCHITECT.

PROJECT NO.	19-09
DRAWN BY	
DATE	6-28-19
REVISIONS	

SEAL

ROBERT C. CANTER
REGISTERED ARCHITECT
5109
NORTH CAROLINA
HIGH POINT, NC

SHEET

A5